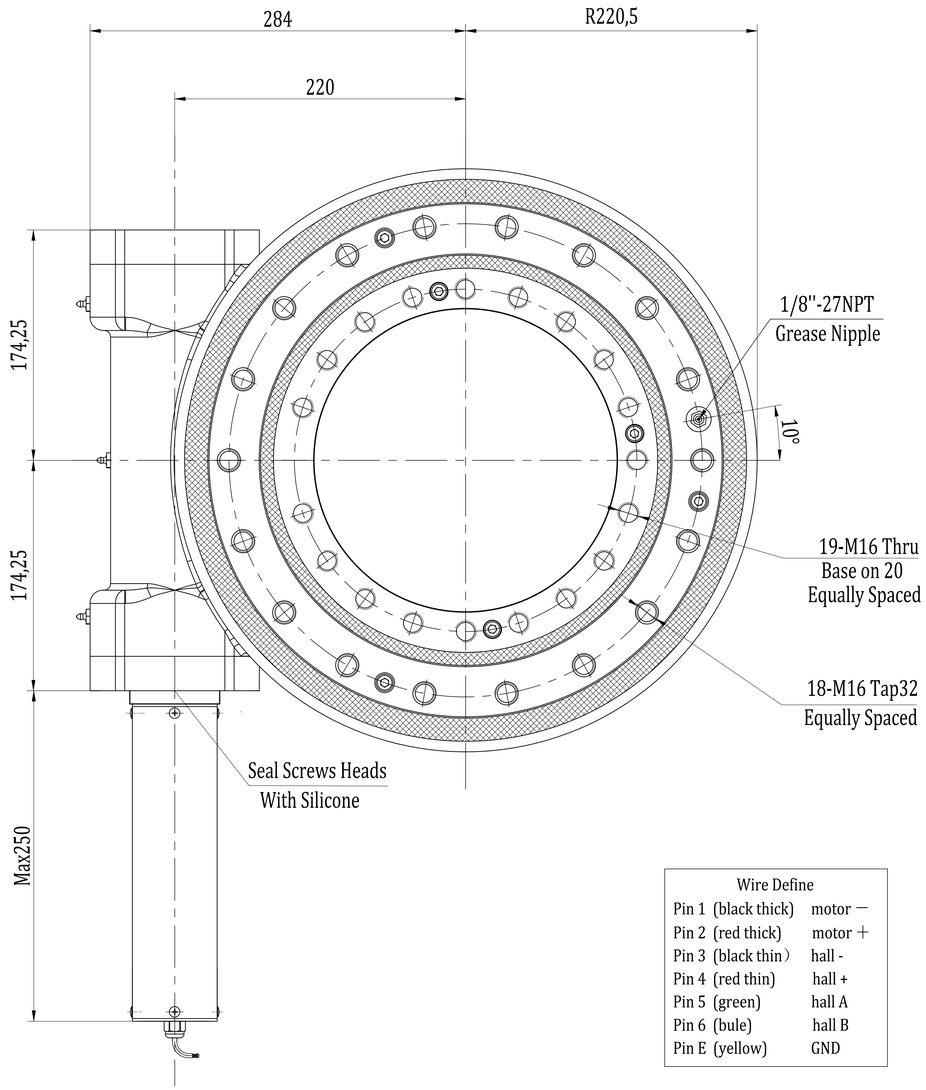

Wire Define		
Pin 1	(black thick)	motor −
Pin 2	(red thick)	motor +
Pin 3	(black thin)	hall -
Pin 4	(red thin)	hall +
Pin 5	(green)	hall A
Pin 6	(bule)	hall B
Pin E	(yellow)	GND

Cable
1m

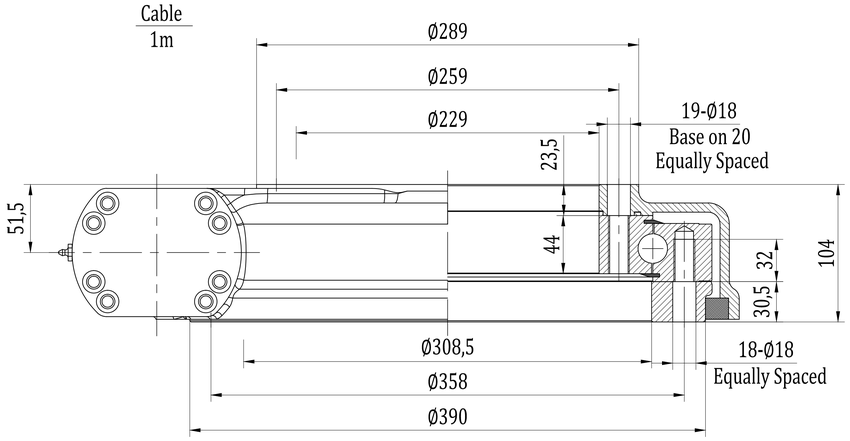

MOMENT LOAD CHART

Axial Load &Tilting Moment

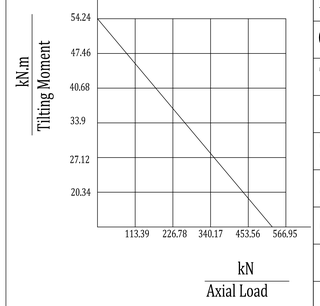

Slewing Drive Performance Parameters		
Rated Output Speed	0.038 rpm	
Output Torque	1030 N.m	760 lbf.ft
Tilting Moment	54.3 kN.m	40×10^3 lbf.ft
Holding Torque	43 kN.m	31.7×10^3 lbf.ft
Static Axial Load Rating	475 kN	106.8×10^3 lbf
Static Radial Load Rating	190 kN	42.7×10^3 lbf
Gear Ratio	78:1	
Precision	≤0.17°	

24VDC Planetary Reducer Motor Performance Data（24H/30/33）	
Rated Output Torque	33 N.m
Rated Output Speed	3 rpm
IP Class	IP 65
Rated Current	＜1.9 A
Temperature	-40 - +60°C

MAGNETIC PULSE GENERATOR DATA		
Output type	-	voltage output
pull-up resistor		yes
Output signal	-	2 square wave signals
Phase quadrature	-	90 °
Impulses per revolution	ppr	2,channels A and B
Operating voltage	VDC	DC5-24
Operating current	mA	max. 12
Deviation of pulse width	-	max. 15 °
Deviation of phase shift	-	max. 15 °
Output voltage(low level)	VDC	max. 0.4 (20mA)
SIGNAL RISE TIME	ns	85
SIGNAL DECAY TIME	ns	60
Operation temperature	°C	-40 - +85

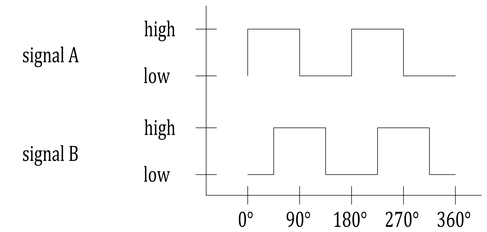

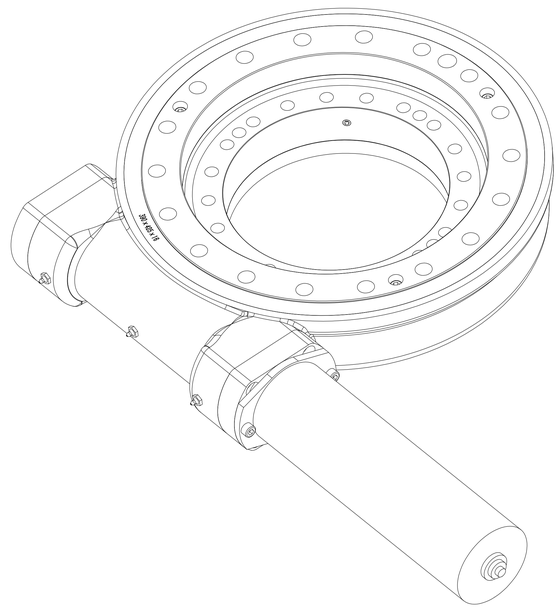

suprabox

PIVEXIN TECHNOLOGY
www.pivexin-tech.pl

ALL PROPRIETARY RIGHTS IN THE SUBJECT MATTER HERE OF ARE RESERVED, AND NO PERMISSION IS GRANTED OR TO DISCLOSE REPRODUCE THIS PRINT IN WHOLE OR IN PART, ANY OF THE INFORMATION TO OTHERS.

WEIGHT	SCALE
64 kg	1 : 3
SIZE	A3
SHEET	1 / 1

SYMBOLE ISO

Obrotnica solarna supraBox solar

12C z silnikiem DC 24V IP65